TESLA Report 2004-03

Comparison of Stripline and Cavity Beam Position Monitors

V. Sargsyan

DESY-Zeuthen

Abstract

Operational principles of stripline and pill-box cavity beam position monitors (BPMs) are discussed. Their theoretically best achievable position and time resolutions are computed. Numbers are estimated using design values of the proposed e^+e^- linear collider TESLA.

Introduction

Important characteristics of a beam position monitor (BPM) are position and time resolutions. Position resolution is the smallest deflection of the beam which a BPM can sense. Time resolution is the time which a BPM needs to be ready for the next bunch detection. For example, if bunch to bunch position measurements should be performed, the BPM time resolution should be shorter than the distance between bunches.

Different types of BPMs were developed. Which type to choose depends strongly on the particular task. In the next sections most often used BPM types, stripline and cavity BPMs, are discussed.

1 Stripline BPM

A displaced beam produces non-equal current distributions on stripline electrodes. Comparing these non-equal signals allows to detect the bunch position transverse to the beam direction.

The electrode of a stripline monitor consists of a transmission line of length L and width $2(\phi - \theta)$ which is mounted into the beam pipe, see fig.s

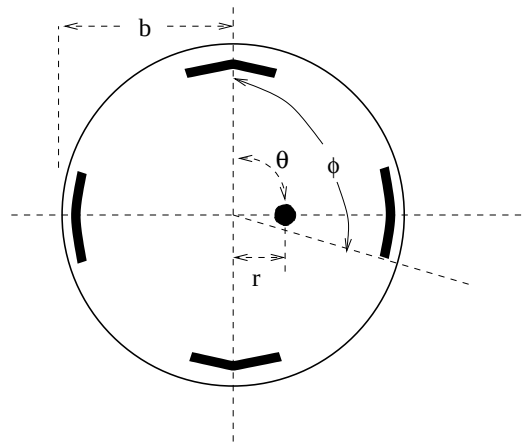

Figure 1: Cross section of the beam pipe with the beam. The thick lines show the cross-section of the stripline electrodes.

1 and 2. The stripline is terminated with its characteristic impedance Z_0 at both ports.

Since the width of the electrode consists of a fraction of the beam-pipe circumference, the stripline will intercept only a part of the image current. This fraction of current will travel across the upstream gap (fig. 2 a), which gives rise to a voltage pulse. The magnitude of the pulse is equal to the captured fraction of the image current times the characteristic impedance of the stripline. Because of the same impedance from both sides, the voltage pulse will split into two equal pulses, with one traveling through the upstream port and the other traveling to the downstream termination.

The fraction of the image current traveling from the upstream to downstream gap encounters it at t=L/c, fig. 2 b. Here another pulse is created by the bunch, which is equal to the upstream pulse but has the opposite polarity. This change in polarity is due to the fact that the electrical field lines at the downstream gap start on the edge of the stripline and terminate on the ground plane, whereas the electric field lines at the upstream gap start at the ground plane and terminate on the edge of the stripline.

The pulse generated by the bunch at the downstream gap also splits in two. The half-pulse that was created at the upstream gap and headed downstream arrives at the downstream gap at the same time when the image current is inducing the voltage pulse. Since the half-pulses heading towards the downstream termination have opposite polarity, these pulses cancel each other.

Voltage corresponding to the bunch offset: At first, let us compute

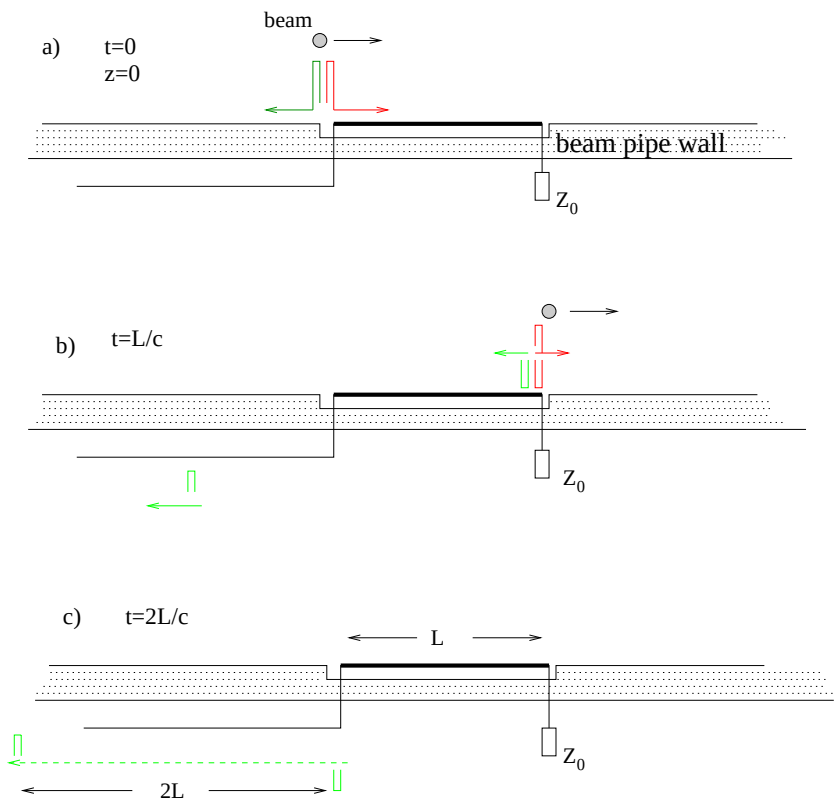

Figure 2: Operation principle of the stripline monitor

the coupled image current produced, for example, by a TESLA bunch [1] with some offset with respect to the center of the beam pipe.

TESLA bunche is short enough ($\sigma_z \approx 300\mu m$) to be approximated as Dirac impulse $\delta(z)$. The bunch current can be written as

$$I_b = q \cdot c \cdot \delta(z) \ \ [\mathrm{C} \cdot \mathrm{s}^{-1}] \tag{1}$$

where q is the bunch charge and c the light velocity. To achieve large signals we assume a maximal width of the stripline electrode of

$$2(\phi - \theta) = \varphi = \frac{\pi}{2}. \tag{2}$$

When the beam trajectory has no offset, the image current coupled by one electrode is

$$I_c = -\frac{I_b}{4} \tag{3}$$

However, if the beam has an offset r the same electrode couples the following image current (see fig. 1 and [2]):

$$I_c(r) = -\frac{I_b}{2\pi}(b^2 - r^2) \int_{-\frac{\pi}{4}}^{\frac{\pi}{4}} \frac{d\varphi}{b^2 + r^2 - 2br \cdot \cos\varphi} \tag{4}$$

If the offset is small compared to the beam pipe radius ($r \ll b$), eq. (4) can be rewritten as

$$I_c(r) \approx -\frac{I_b}{2\pi} \int_{-\frac{\pi}{4}}^{\frac{\pi}{4}} \frac{d\varphi}{1 + \left(\frac{r}{b}\right)^2 - 2\frac{r}{b} \cdot \cos\varphi}. \tag{5}$$

Computing the integral we develop $(1 + \left(\frac{r}{b}\right)^2 - 2\frac{r}{b}\cos\varphi)^{-1}$ in series of $\frac{r}{b}$ at the point $\frac{r}{b} = 0$ and neglect higher order terms

$$\frac{1}{1 + \left(\frac{r}{b}\right)^2 - 2\frac{r}{b} \cdot \cos\varphi} \approx 1 + 2\frac{r}{b} \cdot \cos\varphi \tag{6}$$

Hence, the image current becomes

$$I_c(r) = -\frac{I_b}{4} - \frac{2I_b}{\sqrt{2}\pi b} r, \tag{7}$$

and the current ΔI corresponding to the bunch offset r equals to the difference between eq.s (7) and (3):

$$\Delta I(r) = \frac{2I_b}{\sqrt{2}\pi b} r. \tag{8}$$

The signal response consists of the first half-pulse created at the upstream gap followed by another one with opposite polarity at a distance twice the length of the stripline (fig.2 c). Hence, using the eq. (8) the signal for a beam with displacement r can be written as

$$\Delta V(z, r) = \frac{Z_0 \Delta I(r)}{2} \left[\delta(z) - \delta\left(z - 2L\right)\right], \tag{9}$$

where z is the coordinate along the beam direction. With the Fourier transformation

$$\Delta V(z) = \int_{-\infty}^{\infty} \Delta V(k) e^{ikz} dk \tag{10}$$

$$\Delta V(k) = \frac{1}{2\pi} \int_{-\infty}^{\infty} \Delta V(z) e^{-ikz} dz \tag{11}$$

where k is wave number

$$k = \frac{1}{\lambda} = \frac{\omega}{c}, \tag{12}$$

eq. (9) becomes

$$\Delta V(k,r) = \frac{Z_0 \cdot \Delta I(r)}{2\pi} \cdot e^{i\pi/2} \cdot e^{-ikL} \sin(kL) \ \ [\mathrm{V} \cdot \mathrm{m}] \tag{13}$$

The magnitude of the response has a maximum at frequencies where the electrode length L is an odd multiple of the quarter wavelength:

$$kL = \frac{\pi}{2}(2n-1) \quad \text{or} \quad f_0 = \frac{1}{4}\frac{c}{L}(2n-1) \tag{14}$$

where n=1,2,3... . The stripline pickup is usually designed to operate in the first lobe (n=1). The 3 dB points of this lobe are at [3]

$$f_{low} = \frac{1}{2} f_0, \quad f_{up} = 3 \cdot f_{low} \tag{15}$$

As an example for an electrode in fig. 1 with a length of L=30 cm the signal occurs at the frequency

$$f_0 = \frac{c}{4L} = 250 \ \ \mathrm{MHz}. \tag{16}$$

Using eq.s (1) and (8), and multiplying eq. (13) by

$$k = \frac{\omega}{c} = \frac{\pi}{2L} = 5.2 \quad [\mathrm{m}^{-1}] \tag{17}$$

we obtain, for example, with $r = 100$ μm, $q = 3.2$ [nC] (the TESLA bunch charge) and $b = 39$ mm, a voltage of

$$\Delta V(r = 100\mu\mathrm{m}) \approx 45.7 \ \ \mathrm{mV}. \tag{18}$$

The thermal noise level of the electronics is estimated as

$$V_N = NF\sqrt{4k_bT \cdot BW \cdot Z_0} \approx NF \cdot 0.015 \ \ \mathrm{mV}, \tag{19}$$

where BW is the band width of the signal, which according to eq. (15) results to $BW = 250$ MHz, NF is noise factor and $k_b = 1.38 \cdot 10^{-23}$ [JK^{-1}]

the Boltzmann coefficient. As soon as we know NF we figure out the position resolution δr from eq.s (19) and (18). Since $\Delta V(r)$, the signal due to the bunch offset, has linear dependance on r (see also eq.s (13), (8)), we estimate δr as that value of r at which $\Delta V(r)$ equals V_N:

$$\Delta V(r = \delta r) = \frac{I_b Z_0}{\sqrt{2}\pi^2 b}\delta r \approx V_N. \tag{20}$$

For the stripline BPM in [4] for example, NF is around 10 and we get the position resolution δr equal to 329 nm.

The time resolution is defined by the bandwidth of the signal according to

$$\tau = \frac{1}{\pi \cdot BW} \ \text{[s]}. \tag{21}$$

With $BW = 250$ MHz the time resolution becomes

$$\tau = \frac{10^{-6}}{\pi \cdot 250} \approx 1.27 \ \text{[ns]}. \tag{22}$$

Advantages respectively disadvantages of stripline BPMs can be derived as follows:

• High output levels in the medium RF range (250 ... 500 MHz), which result to high position resolution. But note that the 329 nm resolution value of our example is an idealized value. Position resolutions four times worse, close to 1 μm, are more realistic.

• Moderate read-out electronics; a 50 Ω source impedance simplifies the input filter.

• High time resolution, which is for many applications of great advantage.

• Using a fast inter-bunch feedback system in a linear collider with zero-crossing angle, stripline BPM positioned close to the interaction point (IP) allows directional signal response. In oder words, the BPM detects bunches flying in a predetermined direction, while bunches flying in opposite direction produce no signal in the output port.

• Fabrication of stripline BPMs is in general more complicated than of other BPM types. However, the stripline BPM design in [4] simplifies its fabrication, but bunches from opposite directions produce output signals.

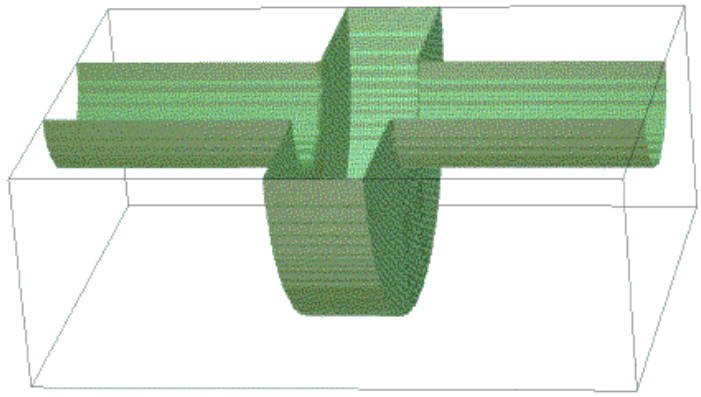

Figure 3: Pick-up station of the cavity BPM

2 Cylindrical Pill-box Cavity BPM

The pick-up station of this position monitor is a cylindrical cavity, mounted into the beam-pipe. Fig. 3 shows the cut of such a structure, designed by the computer code GdfidL [5].

When a beam passes through the cavity, it excites electro-magnetic field oscillations in the cavity. If the beam is off-centered, dipole modes are excited. The larger the offset of the beam, the stronger is the excitation.

From all oscillating modes the first dipole mode TM_{110} is used for beam position monitoring (fig. 4). Its signal in the beam-pipe region (for bunch velocity $v \approx c$) has a linear dependence on the bunch displacement [6], [7].

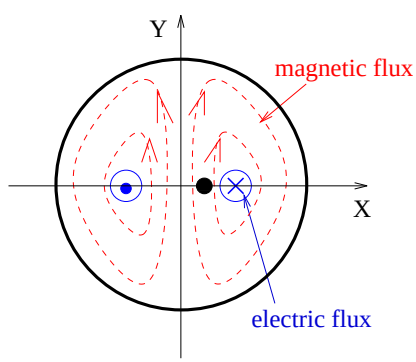

Figure 4: TM_{110}-dipole mode pattern in the cavity perpendicular to the beam; the black spot indicates the position of the bunch

The excited modes are coupled from the cavity by four symmetrically

arranged feedthroughs: two for x and two for y position detection.

The voltage at the dipole mode frequency f_{110} coupled by the antenna into a $Z_0 = 50\Omega$ coaxial cable can be written as

$$V(x) = a \cdot x + n + V_N \tag{23}$$

where x is the bunch offset and n a constant due to leakages of the first and second monopole modes at the dipole mode frequency [6], see fig. 5.

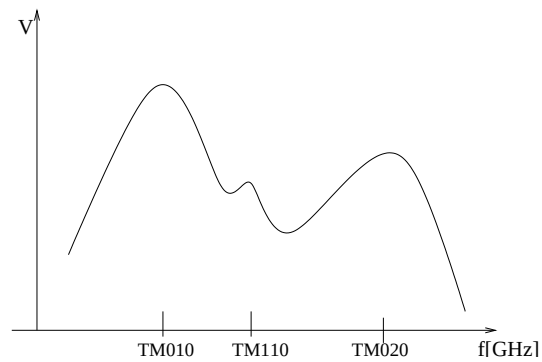

Figure 5: Voltages of the first and second monopole modes together with the TM_{110} dipole mode

The linear term $a \cdot x = V_{110}^{out}(x)$ is the contribution of the dipole mode TM_{110} estimated as (see [8])

$$V_{out}^{110}(x) = \pi f_{110} \sqrt{Z_0 \left(\frac{1}{Q_{ext}}\right) \left(\frac{R_{sh}}{Q}\right)_{110}^{fix}} \frac{x}{x_{fix}} q \equiv a \cdot x \tag{24}$$

where $\left(\frac{R_{sh}}{Q}\right)_{110}^{fix}$ is the shunt impedance R_{sh} over the quality factor Q of the TM_{110}-mode at some fixed offset x_{fix}. Q_{ext} is the external quality factor and q the bunch charge. For more details we refer to [6].

The position resolution δx is defined by

$$V_{110}^{out}(\delta x) = a \cdot \delta x = V_N \tag{25}$$

The termal noise level V_N of the electronics can be computed if the bandwidth and noise factor are known. As an example, the signal bandwidth of 1.5 MHz for the cavity BPM proposed for the cryomodule of the e^+e^- linear collider TESLA and NF of the electronics close to 10 [6] allow, by means of eq. (19), to estimate $V_N \approx 0.011$mV. Hence, a position resolution of 12 nm is obtained from eq. (25), using the value of a from [6].

Advantages and disadvantages of pill-box cavity BPMs can be summarized as follows:

• Pill-box cavity BPMs promise a very high position resolution.

• Cavity BPMs are less favored concerning time resolution, as signals are narrowband.

• An important advantage of cavity BPMs is their radial symmetry, which allows simplier and more precise manufacturing.

Acknowledgments

The author wishes to express his gratitude to H. Henke, H. J. Schreiber and A. Liapine for their support and discussions.

References

[1] TESLA Technical Design Report, *DESY 2001-011, ECFA, 2001-209, hep-ph/0106315*

[2] r. e. schafer, *Beam Position Monitoring,* in AIP Conference Proceedings on Accelerator Instrumentation (AIP, Upton, NY 1989) pp. 26-55

[3] d. p. McGinnis, *The Design of Beam Pickup and Kickers,* Fermi National Laboratory, AIP Conf. Proc., Vol 333(1), pp. 64-85, May 5, 1995

[4] p. evtushenko, a. buechner, h. buettig, p michel, r.schurig, b. wustmann, Stripline Beam Position Monitor for ELBE, FZR, Germany; *K. Jordan*, TJNAF, USA, DIPAC2001, Proc., ESRF, Grenoble

[5] w. bruns, *http://www.gdfidl.de*

[6] v. sargsyan, *http://edocs.tu-berlin.de/diss/2003/sargsyan_vahagn.pdf*, TU Berlin, 2003

[7] h. henke, private communications

[8] a. liapine. *Beam Position Monitor for the TESLA Energy spectrometer,* EPAC 2002, Paris, 2002